Vent A Hood®

DESIGNER SERIES IN STOCK PROGRAM

LUXURY DESIGN FOR YOUR KITCHEN

PINNACLE EXPRESS

Effective August 1, 2020

P.O. Box 1836
Dundee, FL 33838
Phone: 800-292-8374 • Fax: 800-574-8805
www.pinnacleexpress.com

PINNACLE EXPRESS

Additional Designer Series hoods and options are available for custom order. Please see the Pinnacle Express Vent-A-Hood list price book for complete details.

VentAHood®

Madison Premium Magic Lung® Hood with E-Z Clean™ Tray

JDH/C2 Model	Width	CFM	Duct	Retail
JDH136/C2-SS/AS	36”	300	6”	$5,262
JDH236/C2-SS/AS	36”	600	8”	$ 5,670
JDH242/C2-SS/AS	42”	600	8”	$ 6,069
JDH348/C2-SS/AS	48”	900	6” & 8”	$6,865

Hood comes in stainless steel finish with mirrored stainless steel lip treatment on all sides, (2) 2” vertical bands in mirrored stainless steel attached with ½” hex nuts, and a chrome pot rail on the front of the hood.

THE VP562 IS INCLUDED ON 900 CFM MODELS TO COMBINE OUTLETS INTO A SINGLE 10” DUCT.

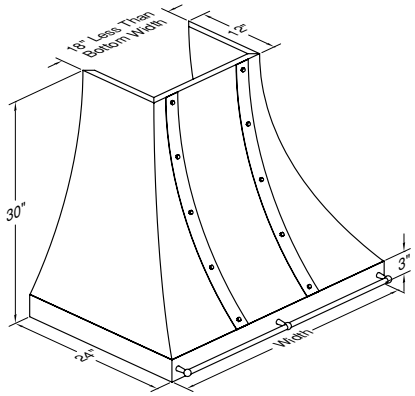

Matching Duct Covers

Model	Width	Height	CLG.	Retail
WDCRND-18/12-MSS/JDH/C2/AS	18”	12”	9’	$ 930
WDCRND-18/24-MSS/JDH/C2/AS	18”	24”	10’	$ 1,097
WDCRND-24/12-MSS/JDH/C2/AS	24”	12”	9’	$ 982
WDCRND-24/24-MSS/JDH/C2/AS	24”	24”	10’	$1,212
WDCRND-30/12-MSS/JDH/C2/AS	30”	12”	9’	$ 1,020
WDCRND-30/24-MSS/JDH/C2/AS	30”	24”	10’	$ 1,290

***Duct cover comes with matching bands that must be installed on site.**

Charleston Premium Magic Lung® Hood with E-Z Clean™ Tray

JDH/SB Model	Width	CFM	Duct	Retail
JDH236/C2-SS/AS-SB	36”	600	8”	$5,596
JDH348/C2-SS/AS-SB	48”	900	6” & 8”	$6,680

Hood comes in stainless steel finish with satin brass lip treatment on all sides, and (2) 2” vertical bands in satin brass attached with laminate.

THE VP562 IS INCLUDED ON 900 CFM MODELS TO COMBINE OUTLETS INTO A SINGLE 10” DUCT.

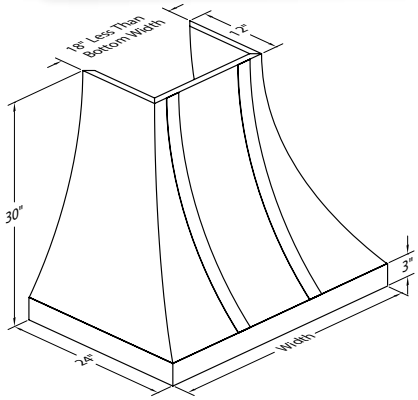

Matching Duct Covers

Model	Width	Height	CLG.	Retail
WDCRND-18/12/JDH/C2/AS-SB	18”	12”	9’	$ 930
WDCRND-18/24/JDH/C2/AS-SB	18”	24”	10’	$ 1,097
WDCRND-30/12/JDH/C2/AS-SB	30”	12”	9’	$ 1,020
WDCRND-30/24/JDH/C2/AS-SB	30”	24”	10’	$ 1,290

***Duct cover comes with matching bands that must be installed on site.**

P.O. Box 1836
Dundee, FL 33838
Phone: 800-292-8374 • Fax: 800-574-8805
www.pinnacleexpress.com

PINNACLE EXPRESS

Isabella Premium Magic Lung Hood® with E-Z Clean™ Tray

JPH/C1 Model	Width	CFM	Duct	Retail
JPH236/C1-WH/AS	36”	600	8”	$5,581
JPH348/C1-WH/AS	48”	900	6” & 8”	$6,558

Hood comes in a white finish with mirrored stainless steel lip treatment on all sides at top and bottom, (2) 1” corner band and (2) 1” back bands in mirrored stainless steel on lip.

USE VP562 (OPTIONAL) ON 900 CFM MODELS TO COMBINE OUTLETS INTO A SINGLE 10” DUCT, LISTED ON PAGE 5.

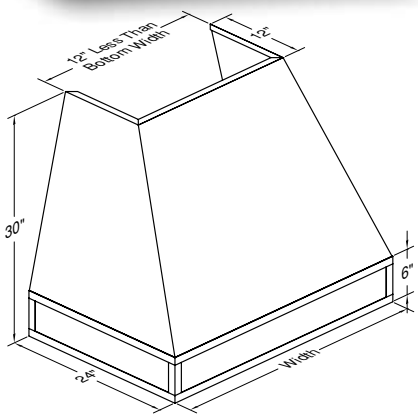

Matching Duct Covers

Model	Width	Height	CLG.	Retail
WDCRND-24/12-WH	24”	12”	9’	$ 552
WDCRND-24/24-WH	24”	24”	10’	$ 693
WDCRND-36/12-WH	36”	12”	9’	$ 604
WDCRND-36/24-WH	36”	24”	10’	$ 809

Phantom Premium Magic Lung Hood® with E-Z Clean™ Tray

JPH/C2 Model	Width	CFM	Duct	Retail
JPH236/C2-BC/AS	36”	600	8”	$4,301
JPH348/C2-BC/AS	48”	900	6” & 8”	$5,207

Hood comes in a black carbide finish with a stainless steel lip treatment on all sides.

USE VP562 (OPTIONAL) ON 900 CFM MODELS TO COMBINE OUTLETS INTO A SINGLE 10” DUCT, LISTED ON PAGE 5.

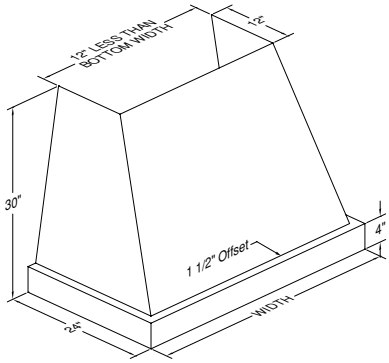

Matching Duct Covers

Model	Width	Height	CLG.	Retail
WDCRND-24/12-BC	24”	12”	9’	$815
WDCRND-24/24-BC	24”	24”	10’	$956
WDCRND-36/12-BC	36”	12”	9’	$867
WDCRND-36/24-BC	36”	24”	10’	$1,072

Additional Designer Series hoods and options are available for custom order. Please see the Pinnacle Express Vent-A-Hood list price book for complete details.

Augustine Premium Magic Lung Hood® with E-Z Clean™ Tray

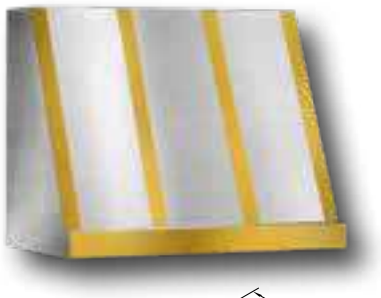

PWVH30-SB Model	Width	CFM	Duct	Retail
PWVH30-236-SS/AS-SB	36"	600	8"	$5,183
PWVH30-348-SS/AS-SB	48"	900	6" & 8"	$6,325

Hood comes in stainless steel finish with satin brass lip treatment on front only, lip has 1 ½" offset, (4) 2" vertical bands in satin brass attached with laminate.

USE VP562 (OPTIONAL) ON 900 CFM MODELS TO COMBINE OUTLETS INTO A SINGLE 10" DUCT, LISTED ON PAGE 5.

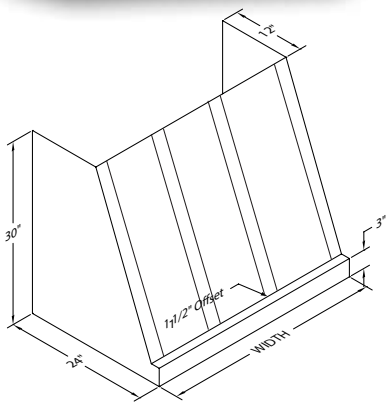

Matching Duct Covers

Model	Width	Height	CLG.	Retail
WDCRND-36/12-PWVH30-SS/AS-SB	36"	12"	9'	$1,422
WDCRND-36/24-PWVH30-SS/AS-SB	36"	24"	10'	$1,757
WDCRND-48/12-PWVH30-SS/AS-SB	48"	12"	9'	$1,539
WDCRND-48/24-PWVH30-SS/AS-SB	48"	24"	10'	$1,976

*** DUCT COVER COMES WITH MATCHING BANDS THAT MUST BE INSTALLED ON SITE.**

Manhattan Premium Magic Lung Hood® with E-Z Clean™ Tray

PWVH30 Model	Width	CFM	Duct	Retail
PWVH30-236-SS/AS-MSS	36"	600	8"	$4,920
PWVH30-348-SS/AS-MSS	48"	900	6" & 8"	$6,063

Hood comes in stainless steel finish with mirrored stainless steel lip treatment on front only, lip has 1 ½" offset, (4) 2" vertical bands in mirrored stainless steel attached with laminate.

USE VP562 (OPTIONAL) ON 900 CFM MODELS TO COMBINE OUTLETS INTO A SINGLE 10" DUCT, LISTED ON PAGE 5.

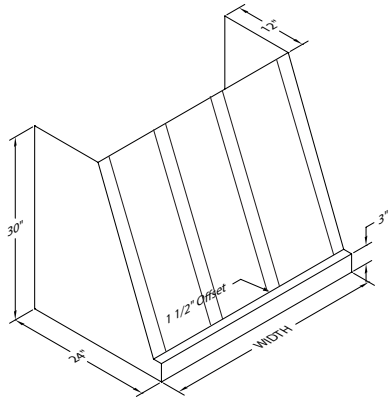

Matching Duct Covers

Model	Width	Height	CLG.	Retail
WDCRND-36/12-PWVH30-SS/AS/MSS	36"	12"	9'	$ 1,422
WDCRND-36/24-PWVH30-SS/AS/MSS	36"	24"	10'	$1,757
WDCRND-48/12-PWVH30-SS/AS/MSS	48"	12"	9'	$1,539
WDCRND-48/24-PWVH30-SS/AS/MSS	48"	24"	10'	$1,976

*** DUCT COVER COMES WITH MATCHING BANDS THAT MUST BE INSTALLED ON SITE.**

P.O. Box 1836
Dundee, FL 33838
Phone: 800-292-8374 • Fax: 800-574-8805
www.pinnacleexpress.com

Napa Premium Magic Lung Hood® with E-Z Clean™ Tray

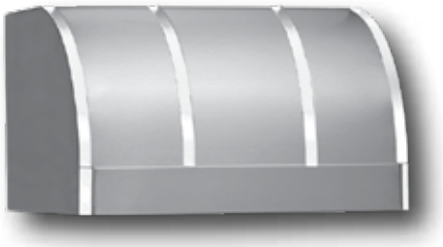

*Picture shown without rivets.

XRH18 Model	Width	CFM	Duct	Retail
XRH18-236-SS/AS	36"	600	8"	$3,448
XRH18-348-SS/AS	48"	900	6" & 8"	$ 4,207

Hood comes in stainless steel finish with (4) 1" vertical bands in mirrored stainless steel attached with ¼" rivets and mirrored stainless steel on clips.

USE VP562 (OPTIONAL) ON 900 CFM MODELS TO COMBINE OUTLETS INTO A SINGLE 10" DUCT, LISTED ON PAGE 5.

Matching Duct Covers*

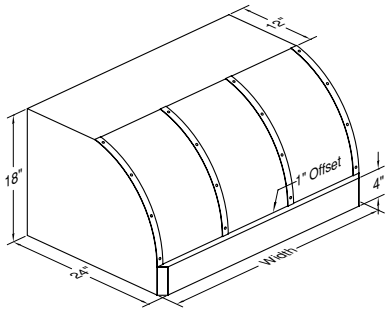

Model	Width	Height	CLG.	Retail
WDCRND-36-SS	36"	12"	8'	$ 718
WDCRND-36/24-SS	36"	24"	9'	$ 1,053
WDCRND-48-SS	48"	12"	8'	$ 834
WDCRND-48/24-SS	48"	24"	9'	$ 1,271
WDCRND-48/36-SS	48"	36"	10'	$1,708

***Duct cover comes in a stainless steel finish without bands.**

Transition for use with 900 CFM Hoods

Model	Description	Retail
VP562	6" Round & 8" Round to 10" Round for 900 CFM Hoods	$118

MULTI-BLOWER TRANSITION

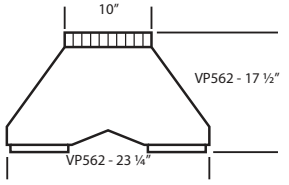

Additional Designer Series hoods and options are available for custom order. Please see the Pinnacle Express Vent-A-Hood list price book for complete details.

NOTES

P.O. Box 1836
Dundee, FL 33838
Phone: 800-292-8374 • Fax: 800-574-8805
www.pinnacleexpress.com

PINNACLE EXPRESS

HOW TO BUILD A CUSTOM DESIGNER SERIES HOOD

Build Your Dream Hood at www.ventahood.com with live 3D Interaction!

1. Select A Style: Designer hoods shown for reference, but select any hood style.

JCH/A1
WALL MOUNT/ ISLAND

JCH/B1
WALL MOUNT/ ISLAND

JCH/C1
WALL MOUNT/ ISLAND

JCH/C2
WALL MOUNT

JPH/C2
WALL MOUNT

JDH/C1
WALL MOUNT/ ISLAND

JDH/C2
WALL MOUNT/ ISLAND

JDH/C3
WALL MOUNT/ ISLAND

JPH/C1
WALL MOUNT/ ISLAND

2. Select a Hood Width: 36”, 42”, 48”, 54”, 60”, or 66”

3. Select a Ceiling Height

4. Select a Blower System: 300 CFM, 600 CFM, 900 CFM, or 1200 CFM

5. Choose Finishes

6. Choose Optional Features:

- Corner Bands
- Vertical Bands
- Pot Rail
- Lip Treatment

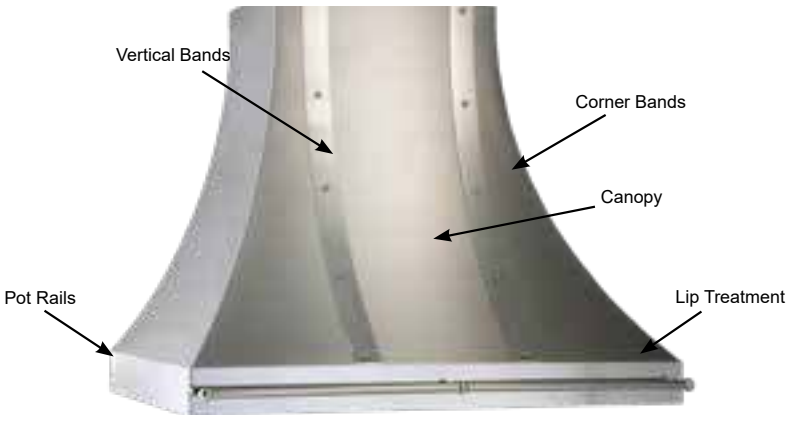

7. Lead Times will Vary Depending on Item Number and Variations Chosen
*Refer to the Pinnacle Express Vent-A-Hood list price book for complete details.

PINNACLE EXPRESS

P.O. Box 1836
Dundee, FL 33838
Phone: 800-292-8374 • Fax: 800-574-8805
www.pinnacleexpress.com